Overview of total Process

- **Create source code**
  - Generally it will be with .java extension. For example Sample.java
- **Compile using ‘javac’ command**
  - It generates BYTECODE with .class extension (e.i. Sample.class)
- **Execute using ‘java’ command**
  - It takes .class file & interprets into machine code by JVM. That machine code will be executed on the OS.

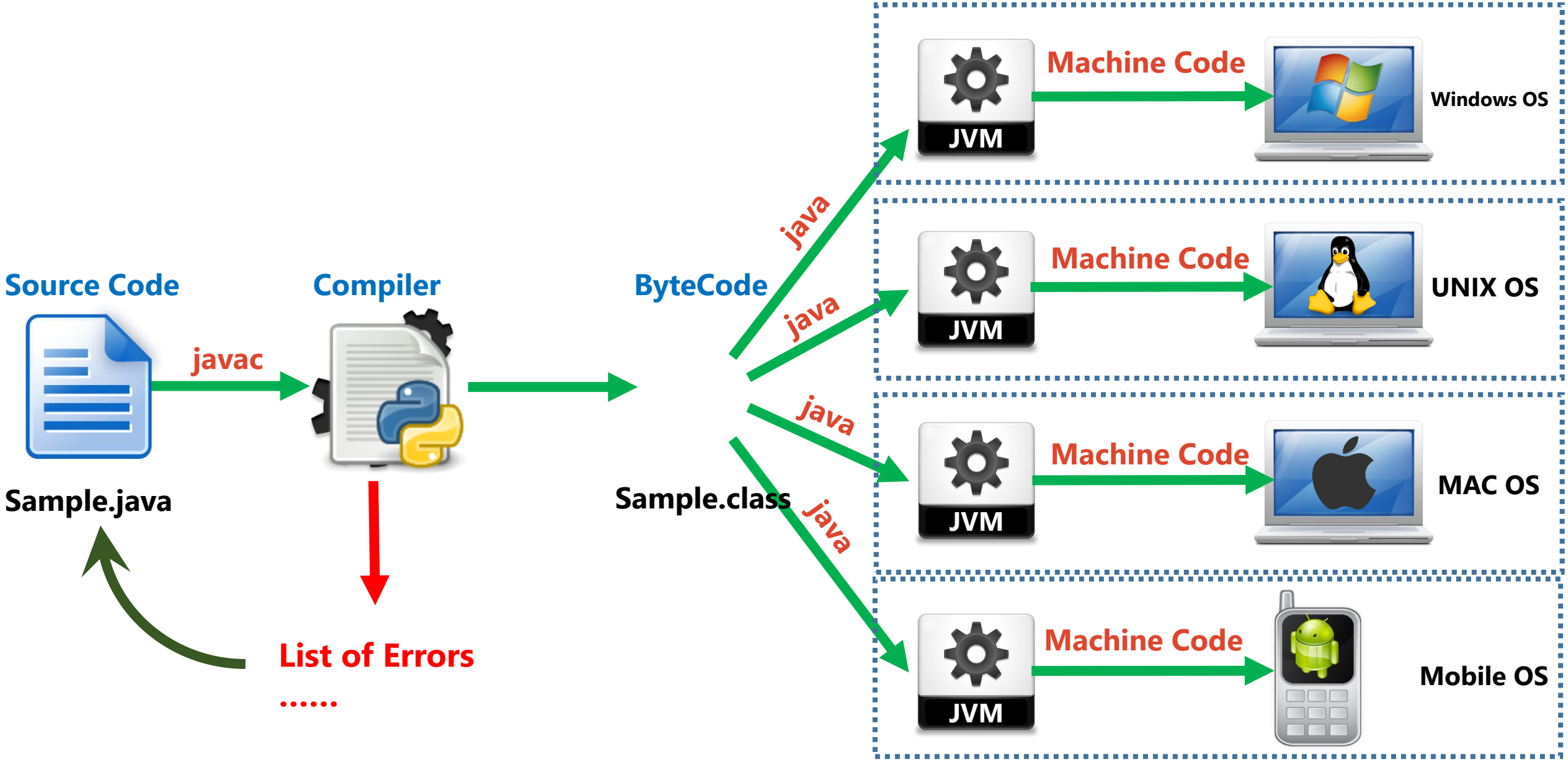
Source Code
Sample.java
javac
Compiler
List of Errors
.....
ByteCode
Sample.class
java
java
java
java
JVM
Machine Code
Windows OS
JVM
Machine Code
UNIX OS
JVM
Machine Code
MAC OS
JVM
Machine Code
Mobile OS

How it is Organized

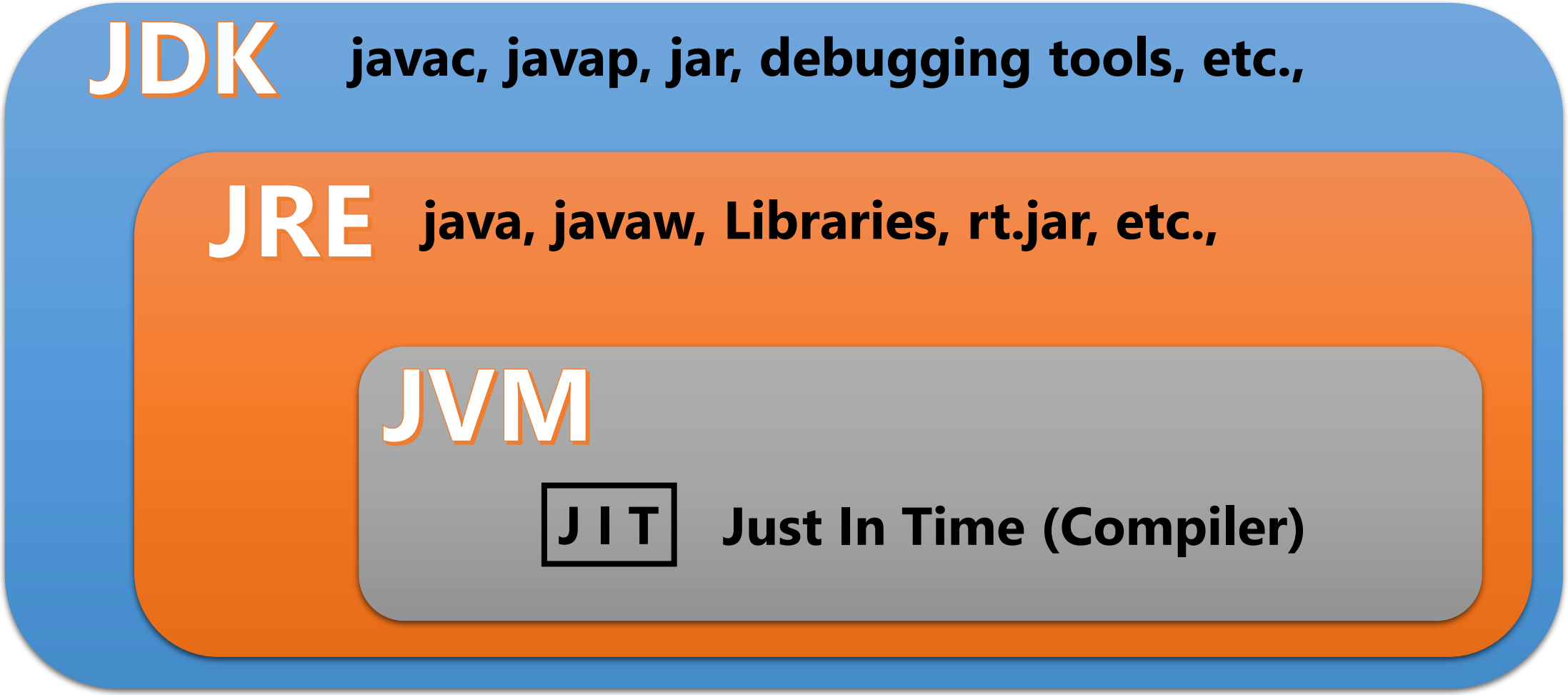

Next….

Choosing Java

Development Environment